Chip Aluminum Electrolytic Capacitors

EAS3 - Wide Temperature 105℃ Aluminum Electrolytic Capacitors

ELECSOUND®

Features:

Designed for surface mounting on density circuit board.
Emboss carrier tape packing system is available for automatic insertion.
Available for reflow soldering
Available for high density surface mounting
High stability and reliability
Temperature up to +105℃ with load life of 1000～2000 hours
Rohs Compliant

Specifictions:

Operating Temperature Range(℃): -55~+105
Rated Voltage Range(V): 4~100V
Nominal Capacitance Ranger(μF): 0.1~6800
Capacitance Tolerance(20 ℃,120Hz) : 20%
Leakage current (μA): Φ4～Φ10: <0.01CV or 3uA whichever is greater(at 25 ℃ ,after 2 minutes)
Φ12.5～Φ16: <0.03CV or 4uA whichever is greater(at 25 ℃ ,after 1 minutes)

Resistance to Soldering Heat

Capacitance Change	Within ±10% of the initial value
Tanδ	Initial specified value or less
Leakage Current	Initial specified value or less

Dissipation Factor(25 ℃,120Hz)

Rated Voltage (V)		4	6.3	10	16	25	35	50	63	100
tan δ	Φ4～Φ10	0.35	0.26	0.2	0.16	0.14	0.12	0.12	0.12	0.12
	Φ12.5～Φ16	0.42	0.38	0.34	0.3	0.26	0.22	0.18	0.14	0.12

Stability at Low Temperature (Measurement frequency: 120Hz)

Rated voltage (V.DC)			4	6.3	10	16	25	35	50	63	100
Impedance ratio ZT/Z20 (max)	Φ4～Φ10	Z(-25℃)/Z (20℃)	7	4	3	2	2	2	2	2	3
		Z(-40℃)/Z(20℃)	15	8	6	4	4	3	3	3	4
	Φ12.5～Φ16	Z(-25℃)/Z(20℃)	7	5	4	3	2	2	2	2	2
		Z(-40℃)/Z(20℃)	17	12	10	8	5	4	3	3	3

Load Life(+105 ℃)

Time	2000 hours (1000 hours' for Φ4～Φ6.3x5.4)
Leakage Current	Not more than the specified value.
Capacitance Change	Within ±20% of the initial value for capacitors of 10V or more, and within ±30% of the initial value for capacitors of 4V & 6.3V
Dissipation Factor	Not more than 200% of the specified value.

Shelf Life(+105 ℃)

Time	1000 hours
Leakage Current	Not more than the specified value.
Capacitance Change	Within ±15% of the initial value.
Dissipation Factor	Not more than 200% of the specified value.

After test:Rated Voltage to be applied for 30 minutes, 24 to 48 hours before measurement.

Dimensions : (Unit:MM)

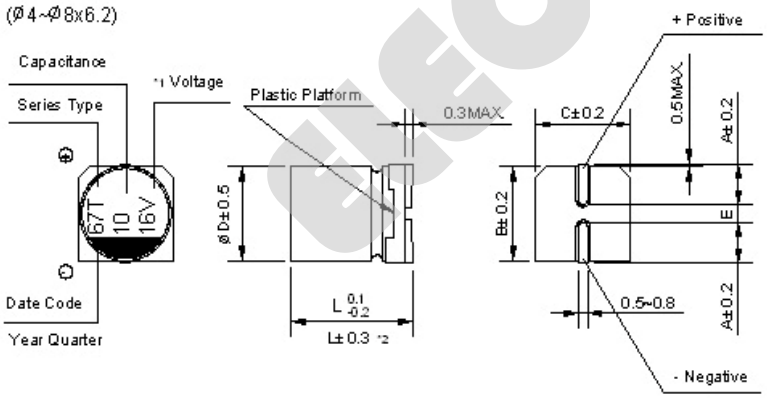

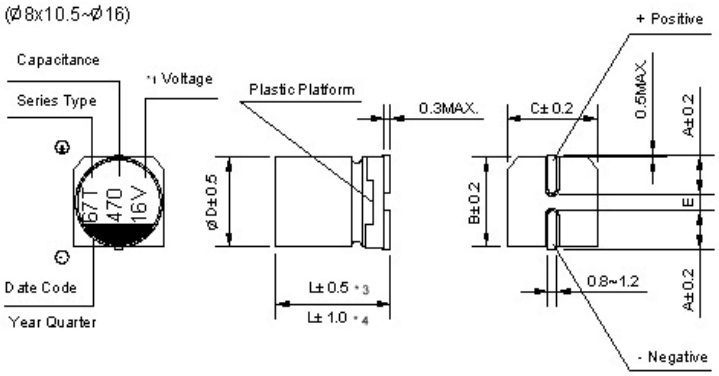

D×L	4×5.4	5×5.4	6.3×5.4	6.3×7.7	8×6.2	8×10.5	10×10.5	10×13.5	12.5×13.5	12.5×16	16×16.5
A	1.8	2.1	2.4	2.4	3.3	2.9	3.2	3.2	4.7	4.7	5.5
B	4.3	5.3	6.6	6.6	8.3	8.3	10.3	10.3	12.8	12.8	16.3
C	4.3	5.3	6.6	6.6	8.3	8.3	10.3	10.3	12.8	12.8	16.3
E ± 0.2	1	1.3	2.2	2.2	2.2	3.1	4.4	4.4	4.4	4.4	6.7
L	5.4	5.4	5.4	7.7	6.2	10.5	10.5	13.5	13.5	16	16.5

ELECSOUND 1/5

ELECSOUND ELECTRONICS COMPANY LIMITED
TEL: 0086-755-83045964 FAX: 0086-755-82948027 Website: www.elecsound.com.cn Eamil:sales@elecsound.com.cn

Chip Aluminum Electrolytic Capacitors

EAS3 - Wide Temperature 105℃ Aluminum Electrolytic Capacitors

ELECSOUND®

Frequency Correction Factor of Rated Ripple Current

Frequency / Capacitance (μF)		50Hz	120Hz	300Hz	1kHz	10kHz~
Φ4～Φ10	0.1～68	0.7	1	1.17	1.36	1.5
	100～3300	0.85	1	1.08	1.2	1.3
Φ12.5～Φ16	～68	0.75	1	1.35	1.57	2
	100～680	0.8	1	1.23	1.34	1.5
	1000～6800	0.85	1	1.1	1.13	1.15

Standard size & Maximum permissible ripple current

WV		4		6.3		10		16		25	
		0G		0J		1A		1C		1E	
Cap.(μF)		Case Size	Ripple Current	Case Size	Ripple Current	Case Size	Ripple Current	Case Size	Ripple Current	Case Size	Ripple Current
4.7	4R7	-	-	-	-	-	-	-	-	4×5.4	13
10	100	-	-	-	-	-	-	4×5.4	18	5×5.4	20
		-	-	-	-	-	-			(4×5.4)	-14
22	220	-	-	4×5.4	22	5×5.4	25	5×5.4	27	6.3×5.4	36
		-	-			(4×5.4)	-20	(4×5.4)	-20	(5×5.4)	-25
33	330	5×5.4	30	5×5.4	27	5×5.4	30	6.3×5.4	40	6.3×5.4	44
		(4×5.4)	-18	(4×5.4)	-22	(4×5.4)	-22	(5×5.4)	-28	(5×5.4)	-29
47	470	5×5.4	36	5×5.4	33	6.3×5.4	41	6.3×5.4	48	6.3×5.4	48
		(4×5.4)	-24	(4×5.4)	-25	(5×5.4)	-30	(5×5.4)	-31	(8×6.2)	-91
100	101	6.3×5.4	60	6.3×5.4	50	6.3×5.4	53	6.3×5.4	60	6.3×7.7	91
		(5×5.4)	-43	(5×5.4)	-39	(8×6.2)	-110	(8×6.2)	-120		
150	151	6.3×5.4	52	6.3×5.4	55	6.3×5.4	62	6.3×7.7	95	8×10.5	140
										(6.3×7.7)	-100
220	221	6.3×5.4	57	6.3×7.7	105	6.3×7.7	105	8×10.5	150	8×10.5	175
				(6.3×5.4)	-67	(8×6.2)	-105	(6.3×7.7)	-105		
				-	-	-	-	(8×6.2)	-85		
330	331	6.3×7.7	100	6.3×7.7	105	8×10.5	196	8×10.5	195	10×10.5	240
										(8×10.5)	-220
470	471	6.3×7.7	105	8×10.5	210	10×10.5	260	10×10.5	295	10×10.5	280
				(6.3x7.7)	-120	(8×10.5)	-210	(8×10.5)	-230		
680	681	8×10.5	210	8×10.5	210	10×10.5	270	10×10.5	315	10×13.5	400
1000	102	8×10.5	230	10×10.5	300	10×10.5	315	12.5×13.5	500	-	-
				-	-			(10×13.5)	-390	12.5×13.5	580
				(8×10.5)	-230			(10×10.5)	-340	-	-
1500	152	10×10.5	315	10×13.5	450	10×13.5	460	12.5×13.5	550	12.5×16	850
				(10×10.5)	-315						
2200	222	10×13.5	440	12.5×13.5	620	12.5×13.5	680	16×16.5	950	16×16.5	1050
		(10×10.5)	-340	(10×13.5)	-500			(12.5×16)	-750		
3300	332	10×13.5	490	12.5×16	700	16×16.5	1000	16×16.5	1000	-	-
				(12.5×13.5)	-660					-	-
4700	472	12.5×13.5	600	16×16.5	1000	-	-	-	-	-	-
6800	682	16×16.5	950	-	-	-	-	-	-	-	-
		(12.5×16)	-650	-	-	-	-	-	-	-	-

Ripple Current (mA rms) at 105℃ 120Hz

ELECSOUND 3/5

ELECSOUND ELECTRONICS COMPANY LIMITED

TEL: 0086-755-83045964 FAX: 0086-755-82948027 Website: www.elecsound.com.cn Eamil:sales@elecsound.com.cn

Chip Aluminum Electrolytic Capacitors

EAS3 - Wide Temperature 105℃ Aluminum Electrolytic Capacitors

ELECSOUND®

Standard size & Maximum permissible ripple current

WV		35		50		63		100	
		1V		1H		1J		2A	
Cap.(μF)		Case Size	Ripple Current	Case Size	Ripple Current	Case Size	Ripple Current	Case Size	Ripple Current
0.1	0R1	-	-	4×5.4	0.7	4×5.4	0.7	-	-
0.22	R22	-	-	4×5.4	1.6	4×5.4	1.6	-	-
0.33	R33	-	-	4×5.4	2.5	4×5.4	2.5	-	-
0.47	R47	-	-	4×5.4	3.5	4×5.4	3.5	-	-
1	10	-	-	4×5.4	7	4×5.4	7	4×5.4	7
2.2	2R2	-	-	4×5.4	11	4×5.4	11	6.3×5.4	14
3.3	3R3	4×5.4	13	4×5.4	13	5×5.4	13	6.3×7.7	32
								(6.3×5.4)	-20
								(8×6.2)	-30
4.7	4R7	4×5.4	14	5×5.4	16	5×5.4	16	6.3×7.7	35
				(4×5.4)	-13			(6.3×5.4)	-21
10	100	5×5.4	21	6.3×5.4	24	6.3×7.7	39	8×10.5	77
		(4×5.4)	-14			(6.3×5.4)	-24	(6.3×7.7)	-35
		-	-			(8×6.2)	-25		
22	220	6.3×5.4	38	6.3×7.7	51	8×10.5	98	10×10.5	126
				(6.3×5.4)	-42	(6.3×7.7)	-49	(8×10.5)	-84
				(8×6.2)	-70	-	-	-	-
33	330	6.3×5.4	42	6.3×7.7	60	8×10.5	112	10×10.5	133
		(8×6.2)	-84						
47	470	6.3×7.7	70	8×10.5	120	10×10.5	160	12.5×13.5	250
		(6.3×5.4)	-50	(6.3×7.7)	-63	(8×10.5)	-119	(10×13.5)	-160
		-	-	-	-	-	-	(10×10.5)	-140
68	680	-	-	-	-	-	-	12.5x13.5	300
		-	-	-	-	-	-	(10x13.5)	-180
100	101	8×10.5	120	10×10.5	170	12.5×13.5	270	16×16.5	450
		(6.3×7.7)	-84	(8×10.5)	-140	(10×13.5)	-210	(12.5x13.5)	-380
		-	-	-	-	(10×10.5)	-196	-	-
150	151	8×10.5	155	10×10.5	170	10×13.5	225	-	-
220	221	10×10.5	220	10×13.5	280	16×16.5	560	16×16.5	550
		(8×10.5)	-190	(10×10.5)	-220	(12.5×13.5)	-470		
		-	-	-	-	(10x13.5)	-235		
330	331	10×10.5	245	16×16.5	600	16×16.5	700	-	-
				(12.5×13.5)	-420	(12.5×16)	-510	-	-
				(10x13.5)	-295	-	-	-	-
470	471	12.5×13.5	520	16×16.5	700	16×16.5	750	-	-
		(10×13.5)	-375	(12.5×16)	-520			-	-
		(10×10.5)	-280	-	-			-	-
680	681	12.5×13.5	530	16×16.5	750	-	-	-	-
		(10×13.5)	-395			-	-	-	-
1000	102	16×16.5	750	-	-	-	-	-	-
		(12.5×16)	-600	-	-	-	-	-	-

Ripple Current (mA rms) at 105℃ 120Hz

ELECSOUND 375

ELECSOUND ELECTRONICS COMPANY LIMITED

TEL: 0086-755-83045964 FAX: 0086-755-82948027 Website: www.elecsound.com.cn Eamil:sales@elecsound.com.cn